FIRST ANGLE PROJECTION (ALL DIMENSIONS ARE IN MM.)

DRAWING No. TB-1-400-316-001

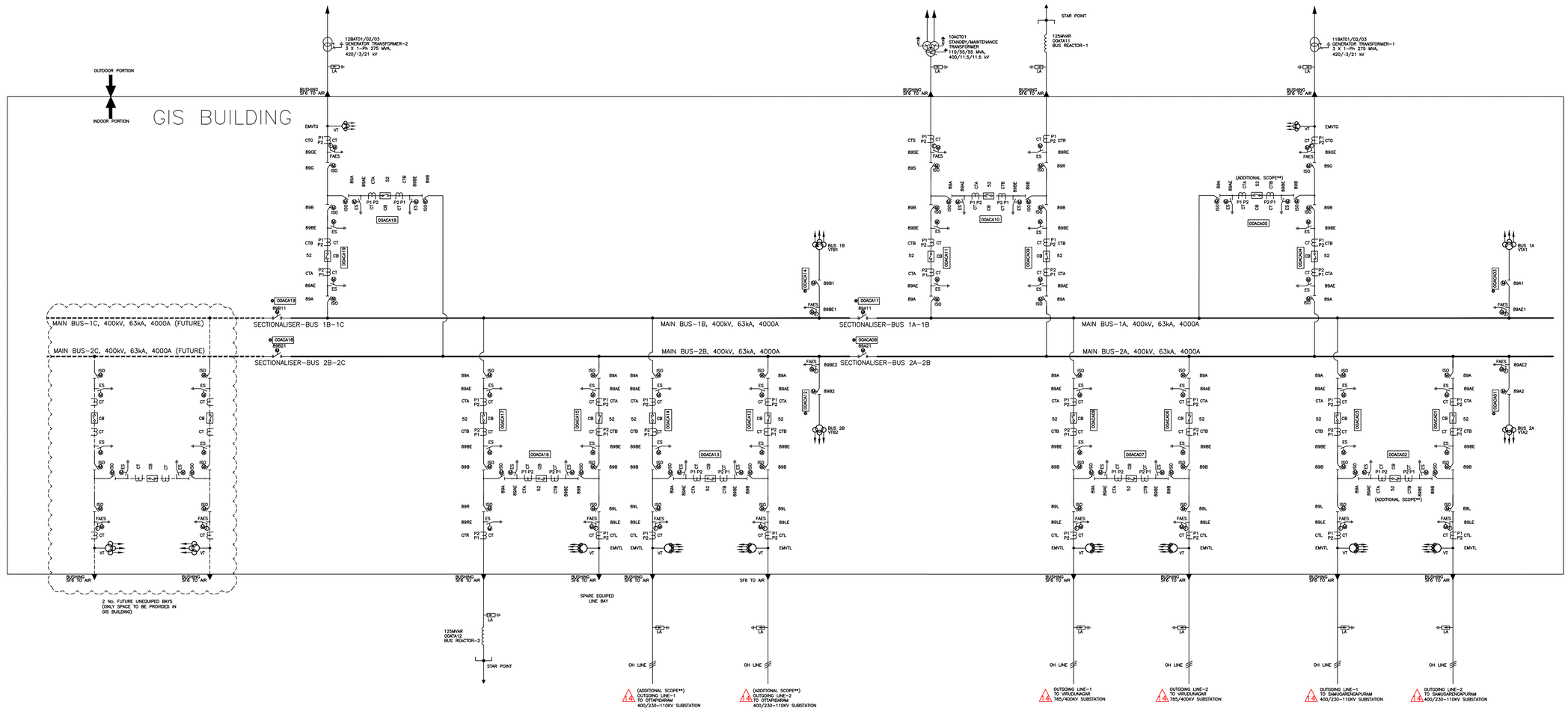

BILL OF QUANTITY:

S.No.	DESCRIPTION	SYMBOLS	UNIT	QTY	ADD. SCOPE QTY**	DELETED QTY
1.	400 KV CIRCUIT BREAKER, 2000 A (3-Ph)		No.	15	04	--
2.	400 KV ISOLATOR, 2000 A (3-Ph), MOTORISED		No.	42	12	--
3.	400 KV EARTH SWITCH, 2000A (3-Ph), MOTORISED		No.	32	08	--
4.	400 KV FAST ACTING EARTHSWITCH, 2000A (3-Ph), MOTORISED		No.	10	04	--
5.	400 KV, 3-CORE, CURRENT TRANSFORMER, 2000A (1-Ph) (CTA & CTB)		No.	90	24	--
6.	400 KV, 2-CORE, CURRENT TRANSFORMER, 2000A (1-Ph) (CTL,CTG,CTS & CTR)		No.	30	06	--
7.	400 KV, 3-CORE, BUS EMVT (1-Ph)		No.	06	06	--
8.	400 KV, 4-CORE, EMVT FOR LINE/SPARE BAY (1-Ph)		No.	15#	06	--
9.	400 KV, 3-CORE, EMVT FOR GT (1-Ph)		No.	06	--	--
10.	SURGE ARRESTOR, 390kV, 20kA (1-Ph)		No.	27	06	--
11.	400 KV BUS REACTOR(125MVAR)(BHEL-BPL SUPPLY)		No.	02	--	
12.	400 KV SF6 TO AIR BUSHING (1-Ph)		No.	30	06	--
13.	400 KV ISOLATOR-BUS SECTIONALISER,4000A (3-Ph), MOTORISED		No.	02	02	--
14.	GENERATOR TRANSFORMER(GT), 3 X 1-Ph 275 MVA, 420/√3/21 kV, (BHEL-PEM SUPPLY)		No.	02	--	--
15.	STANDBY/MAINTENANCE TRANSFORMER (ST) 110/55/55 MVA, 400/11.5/11.5 kV (BHEL-PEM SUPPLY)		No.	01	--	--
16.	400 KV LINE CVT (1-Ph)		No.	--	--	12
17.	400 KV, 2-CORE, EMVT FOR LINE (1-Ph)		No.	--	--	12
18.	400 KV, 3-CORE, EMVT FOR SPARE BAY (1-Ph)		No.	--	--	03

TYPE OF CONDUCTORS FOR OVERHEAD & EQUIPMENT CONNECTION:

Flexible conductor (for 400kV, 2000A connection): ACSR Twin Moose conductor (in BHEL scope as per layout)

Rigid conductor (for 400kV, 2000A connection): 4" IPS (EH) Aluminum Tube (in BHEL scope as per layout)

Outgoing line conductor : ACSR Quad Moose conductor (not in BHEL scope)

@ Bay no. for Bus sectionaliser, Bus VT with its Isolator & FAES is indicated as per their position in respective LCC. Total 19 LCC (IN GIS vendor scope) will be provided.

SYSTEM PARAMETERS:

1	Nominal system voltage	400 kV (rms)
2	Highest system voltage	420 kV (rms)
3	Type of earthing	Solidly grounded
4	Lightning impulse withstand voltage	1425 kV (peak)
5	Switching impulse withstand voltage	1050 kV (peak)
6	Power frequency withstand voltage (dry)	630 kV (rms)
7	Short Circuit level	63 kA for 1 sec.
8	Creepage distance for outdoor	31 mm/kV
9	Bus bar rating	4000A
10	Bus Sectionaliser Isolator Rating	4000A
11	Breaker Rating (Bay)	2000A
12	Isolator Rating (Bay)	2000A
13	Lightning Arrester	390 kV

REV.	DATE	ALTD	CHD	APPD	
14	22.10.2020	SS	SKS	AG	Revised as per TANGEDCO letter CE/C/SE/C/EE/E/AEE/F.2/D.No. 205/20 Dt. 13.10.2020 received vide e-mail dated 21.10.2020
13	24.04.2020	SS	SKS	AG	Revised as per clarification vide TB-1-400-316-001-DCN Rev 02
12	07.04.2020	SS	SKS	AG	Revised as per comments on Rev 11 vide letter TCE.11403A-EL-VDT-422 DATED 26.03.2020
11	20.03.2020	SS	SKS	AG	Document already approved in Cat -I vide TCE.11403A-EL-VDT-350 dated 06.01.2020. Revised as per Lr. No. CE/Pr2/SE/C/UTP/EE/E/AEE/F.UTPP GIS/D.80/20 dt. 19.03.20
10	02.01.2020	SS	SKS	AG	Revised as marked rev 10
09	16.12.19	SS	SKS	AG	Revised as marked rev 09
08	15.11.19	SS	SKS	AG	Revised as marked rev 08
07	20.07.19	SS	SKS	AG	Revised as per comments on Rev 05 vide letter TCE.11403A-EL-VDT-152 dated 18.07.2019 (FAES abbreviation added for bus VT)
06	08.07.19	SS	SKS	AG	Revised as per comments on Rev 05 vide letter TCE.11403A-EL-VDT-126 dated 03.07.2019
05	20.06.19	SS	SKS	AG	Revised as per comments on Rev 04 vide TCE.11403A-EL-VDT-080 dated 31-05-2019
04	29.05.19	SS	SKS	AG	Revised as per comments on Rev 03
03	13.05.19	SS	SKS	AG	Revised as per comments on Rev 02
02	02.11.18	SS	SKS	AG	Revised as per comments on Rev 01
01	10.08.18	SS	SKS	AG	

JOB NO.

STATUS CONTRACT

DISTRIBUTION

PROJECT: 2X660 MW UDANGUDI SUPERCRITICAL TPS, STAGE-I

CUSTOMER: TAMILNADU GENERATION AND DISTRIBUTION CORPORATION LIMITED (TANGEDCO)

CONSULTANT: TATA CONSULTING ENGINEERS LIMITED BENGALURU

BHARAT HEAVY ELECTRICALS LTD
TRANSMISSION BUSINESS GROUP
NOIDA

COPY RIGHT AND CONFIDENTIAL
The information on this document is the property of BHARAT HEAVY ELECTRICALS LIMITED it must not be used directly or indirectly in any way detrimental to the interest of the company.

DEPT CODE		NAME	SIGN	
E	DRN	SY		06.02.18
	DESN	SS		06.02.18
	CHD	SKS		06.02.18
	APPD	AG		06.02.18

TITLE: SINGLE LINE DIAGRAM OF 400KV GIS SUBSTATION

DEPT. | SCALE 1:300 | SIGN

DRAWING NO. TB-1-400-316-001

SHEET 01 OF 01 | REV. 14